Installation

Friant Wood CO.,LTD.

1

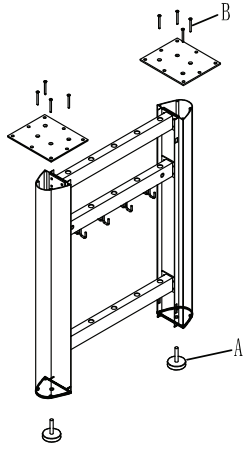

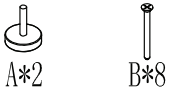

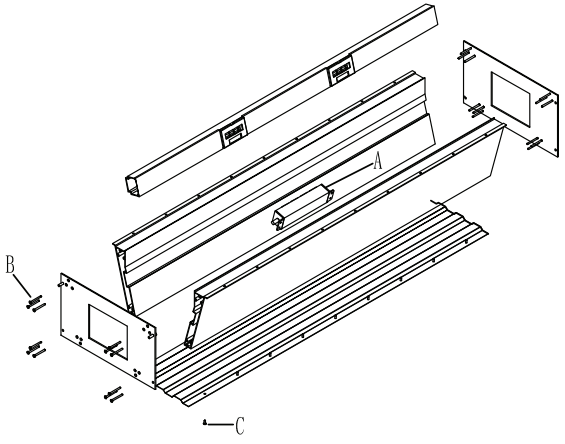

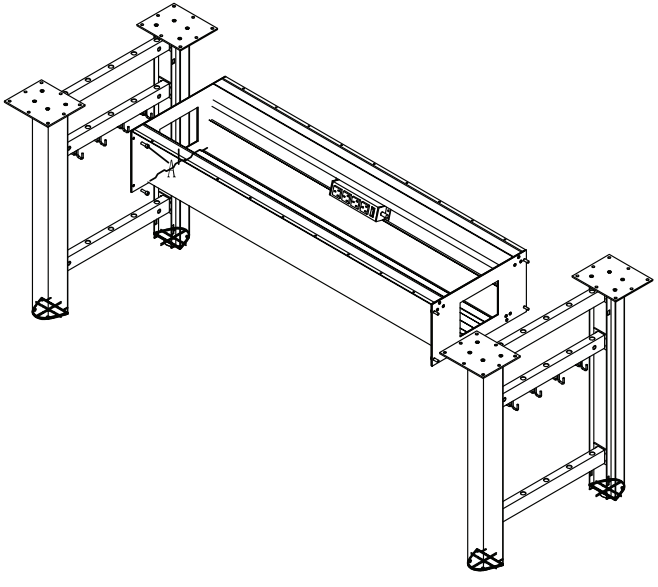

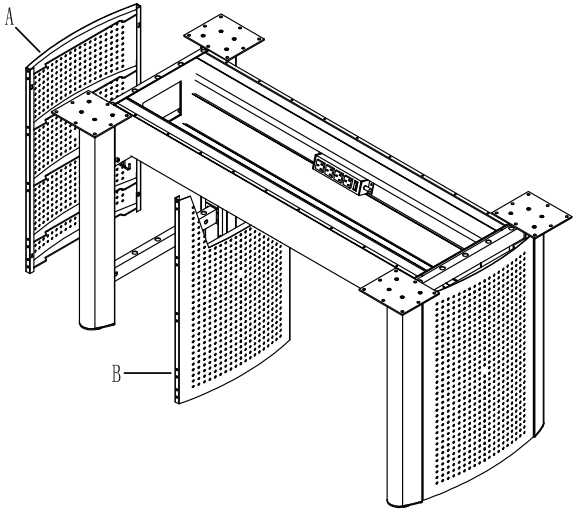

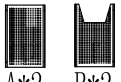

4901 EAST 12th St / Oakland / California 94601 / T: 510.535.5113 / F: 510.535.5237 / friant.com

FRÍANT